AI for Good

RULEBOOK 2026–2027

make +learn

ITU

a. Challenge theme

As the world faces increasingly complex health crises, from humanitarian emergencies to epidemic outbreaks, health systems must be able to act quickly to ensure timely and appropriate care while maintaining essential services for all.

This challenge focuses on how communities and health services can better prepare to respond to a public health emergency. In these situations, any imbalance in the organisation, logistics or coordination of healthcare processes can increase risk of adverse outcomes, put pressure on the system and make it more difficult for people to receive the care they need.

In this scenario, primary care and community health are key components. An effective health system response requires coordinating resources between hospitals, primary care centres and other support spaces to avoid overcrowding and ensure that each case receives the appropriate care.

In this context, technology can help increase response capacity when time and resources are limited. Robotics and artificial intelligence can be applied to automate repetitive or tasks with high risk of communicable disease infection, improve supply logistics and support complex operational processes in fast-changing environments. For example, in an infectious disease health emergency, mobile robots can transport critical materials, carry out tasks in delimited areas, reduce avoidable contact times and support triage workflows. These types of solutions do not replace health teams, but rather provide vital support to them when reliability, speed and safety are essential.

Within this framework, the **Robotics for Good Youth Challenge 2026-2027**, promoted by the **International Telecommunication Union** in partnership with **make+learn**, focuses on addressing these critical issues through robotics applied to a public health emergency.

The competition challenges participating teams to design, build and program autonomous robots to simulate real response operations. Teams, made up of a maximum of **eight members**, will work on a game field that represents key processes in a health emergency situation.

The challenge includes several missions: delimiting a quarantine zone to contain risk and operate with precision; helping with clinical diagnosis by extracting and delivering samples to a laboratory; distributing medical

International Telecommunication Union · Place des Nations · CH-1211 Geneva 20 · Switzerland
Tel: +41 22730 5111 · Fax +41 22733 7256

kits to support the care network between a hospital, primary care centres and a recovery zone; and carrying out medical triage that further involves decisions to be made on the operational level.

Through this scenario, students work on situations related to health emergency response, such as organising safe spaces, managing diagnostic information, distributing resources and prioritising cases according to urgency level. The simulation helps them understand that, in an emergency, every technical decision must contribute to a coordinated, safe response focused on the people's health.

Through simulation in a competitive environment, students will be able to explore how robotics can help strengthen more resilient, efficient and accessible health systems. At the same time, they will put into practice key skills such as planning, collaboration, creativity, reliability and safety, which are necessary to respond to complex situations in healthcare and beyond.

Participation in the challenge provides direct experience in engineering and programming, and helps students understand how technology can be designed and applied using ethical, social and technical criteria to generate a positive impact on the health and well-being of communities.

b. Mission for teams

In this year's challenge, the mission is divided into two main lines of action inspired by realistic response processes during a public health emergency: containment and sample management, and logistic and healthcare management. The game field simulates the deployment of a quarantine zone, the collection and delivery of samples to a laboratory, the distribution of medical kits, and the triage of cases according to urgency level. All these actions test the robots' ability to operate autonomously, accurately and in a coordinated way.

The competition is divided into two categories, **Junior** and **Senior**, with a common mission structure but with some differences in difficulty, validation and scoring criteria. These differences make it possible to adapt the challenge to the age and experience of the participating teams, while maintaining the same thematic and technical framework.

Each match lasts **2 minutes**, during which the robots must operate fully autonomously, except for the authorised interactions.

International Telecommunication Union · Place des Nations · CH-1211 Geneva 20 · Switzerland
Tel: +41 22730 5111 · Fax +41 22733 7256

Starting zone

Each robot, or set of robots, must start completely within the starting zone. This zone measures 480 × 280 mm, is located at the bottom of the board, and is marked out with black adhesive tape. This same type of adhesive tape may be used in other areas of the field to mark specific zones or reference points.

Initially, the robots and game elements may touch the black adhesive tape, they must remain completely within the boundaries of the starting zone. Once the match has started, robots may leave the starting zone.

Each team may use one or more robots, provided that all of them fit entirely within this area. The use of multiple robots is optional. If more than one robot is used, all robots may begin operating simultaneously from the start of the match.

The medical kits and quarantine bars must also start within the starting area. Before the match begins, these elements may be placed on the board, on the robot, or incorporated into its mechanism, as long as the entire setup remains completely within the boundaries of the starting area. No element may extend beyond the marked area, cross the black tape, or touch any external element of the field.

Once the referee has validated the starting position, the team may manually remove from the starting area any game elements they decide not to use during the match. They may also manually handle elements that will later be delivered to the robots, provided that this action is carried out with the robot completely within the starting area.

Mission 1. Containment and sample management

This mission simulates the containment of a public health emergency through two main actions: removing samples from a risk zone and completing the closure of a quarantine area.

In the lower-left part of the field, there is the quarantine zone, which uses two walls of the board as part of its perimeter. At the start of each match, this zone contains three samples. In the Junior category, the three samples are always placed in the same starting positions within the quarantine zone, as indicated on the field layout. These positions remain the same in every match. In the Senior category, however, the samples are placed randomly inside the quarantine zone.

International Telecommunication Union · Place des Nations · CH-1211 Geneva 20 · Switzerland
Tel: +41 22730 5111 · Fax +41 22733 7256

Near Quarantine area, there is the laboratory, a structure with three slots, one for each sample. These slots simulate laboratory analysis points where the samples are registered for processing.

The starting zone also contains two wooden beams that allow teams to complete the closure of the quarantine zone.

- **Step 1. Sample extraction and delivery to the laboratory:** the robot must collect the three samples located inside the quarantine area and transport them to the laboratory. For the task to be valid, the samples must be placed completely inside the laboratory slots, which simulate analysis points where the samples are registered for processing. This action represents common control, isolation and sample management interventions in health emergency situations.

  The samples are flat circular discs. Once the match has started, the team cannot reposition them or modify their position.

  Robots may move through the quarantine zone if they need to collect the samples or carry out the mission strategy, as long as they do not damage any element of the game field.

- **Step 2. Construction of the quarantine zone:** for the task to be valid, the beams must be placed so that, together with the two fixed walls of the field, they completely enclose the area.

  The closure is considered complete when each beam touches one of the fixed walls of the field and, at the same time, the two beams touch each other at one end. In this way, all four sides of the area are delimited, forming a closed, approximately quadrilateral perimeter, with approximately right angles between the sides.

  A beam is considered correctly placed when it remains upright on its long edge, is stable on its own, and has been completely released by the robot. At the end of the match, it must not be held, supported, or in contact with any robot, mechanism, accessory, or team element.

  The beams are rectangular wooden pieces. Before the match starts, the two containment beams must be inside the starting zone. The team may place them freely on the robot or incorporate them into its mechanism before the round begins, as long as the robot and all beams remain completely within the limits of the starting zone.

International Telecommunication Union · Place des Nations · CH-1211 Geneva 20 · Switzerland
Tel: +41 22730 5111 · Fax +41 22733 7256

Once the match has started, the team cannot reposition the beams or intervene in their position. From that moment on, only the robot may transport them and place them in the quarantine zone.

Mission 2. Healthcare management

This mission is related to healthcare management during a public health emergency. Teams must distribute medical supplies and classify different cases according to urgency level, simulating common healthcare coordination interventions in crisis situations.

At the top of the field are the main healthcare destination zones: the hospital (H), located in the centre, and two primary care centres (PCC), located in each corner. These zones are used for the distribution of medical kits and for transporting triaged patients who require hospitalisation. The recovery zone (RZ) is located inside the starting zone and represents the area for low-urgency or recovery cases.

The ten medical kits are located in the starting zone. The kits are wooden cube-shaped pieces that represent medical supplies. Before the match starts, all kits must be inside the starting zone. The team may place them freely on the robot or incorporate them into its mechanism before the round begins, as long as the robot and all kits remain completely within the limits of the starting zone. Once the match has started, team members may only handle the containment beams within the starting area and under the conditions.

In two side areas of the field, there are twelve wooden cylinders placed on circular floor stickers: six cylinders on each side. There are four red cylinders, four yellow cylinders and four green cylinders. At the start of each match, each cylinder is placed on a circular sticker on the floor of the field. These cylinders represent people affected by the health emergency who have been assigned an urgency level.

- **Step 1. Medical kit distribution:** the robot must transport the medical kits from the starting zone to the healthcare destination zones. Each kit placed inside the hospital or inside a primary care centre can score points for the team.

  In this challenge, six kits have to be placed inside the hospital (H), two kits inside one primary care centre (PCC), and two kits inside the other primary care centre (PCC).

International Telecommunication Union · Place des Nations · CH-1211 Geneva 20 · Switzerland
Tel: +41 22730 5111 · Fax +41 22733 7256

- **Step 2. Medical triage:** the robot must classify the twelve triaged patients according to colour and transport them to the corresponding destination zone. Each cylinder, located in ground zone, represents a person affected by the health emergency who has been assigned an urgency level:
  - **Red:** critical case. It must be transported to the **hospital (H).**
  - **Yellow:** observation case. It must be transported to one of the **primary care centres (PCC).**
  - **Green:** recovery case. It must be transported to the **recovery zone (RZ).**

  In the **Junior** category, the position and distribution of the triaged patients are fixed and remain the same in every match. In the **Senior** category, however, the position of the triaged patients is randomised in each match, but the configuration must be the same on both fields competing simultaneously, to ensure equal conditions.

  Robots may classify the cases in a single sequence or combine this task with other actions in the challenge, depending on the team's strategy. It should be noted that any triaged patient placed in an incorrect destination zone may affect the final score. In regard to the patients represented by yellow cylinders, an even distribution between the two primary care centres may provide additional points, but it is not considered an error if all yellow cylinders end up inside a single primary care centre.

The two missions may be carried out in any order decided by the team. They may also be performed in parallel if the team uses more than one robot, as long as all robots comply with the initial conditions established in the rulebook. It is not mandatory to complete all the proposed actions. Actions that are not completed do not score. Any applicable penalties are defined separately in the scoring rules.

c. Game materials

1. Game board. The game board is where the robot game takes place and is divided into two competition fields.

International Telecommunication Union · Place des Nations · CH-1211 Geneva 20 · Switzerland
Tel: +41 22730 5111 · Fax +41 22733 7256

1.1. Elements

- Game board surface: 2,362 ± 5 × 1,143 ± 5 mm
- Competition field surface: 1,181 ± 6 × 1,143 ± 5 mm
- Long side walls: 2,402 ± 5 × 20 ± 1 × 65 ± 2 mm
- Central wall: 1,143 ± 3 × 19 ± 1 × 70 ± 3 mm

1.2. Game surface finish

At the international final, the game board surface will be white, smooth and glossy, with a finish similar to that of a whiteboard.

In regional or national stages, the local organiser may use other materials to build the game field and its elements. For example, MDF surfaces, white boards, printed white tarpaulins or other flat, stable materials suitable for robot operation may be used.

Despite these possible variations, the field must maintain the dimensions, zone layout and general conditions of the challenge to ensure equal conditions between teams within the same stage.

Teams will have adaptation time before the competition scoring matches begin in order to adjust the behaviour of their robots to the official surface.

2. The game uses a combination of specific physical materials to recreate a public health emergency scenario in an interactive way.

3. The main game elements include **samples**, which represent material collected in a risk zone to be analysed; the **laboratory**, which simulates the space for validating and processing the samples; the **containment beams**, which represent physical barriers used to complete a quarantine zone; the **medical kits**, which symbolise medical supplies needed to reinforce the health response; and the **triaged patients**, which represent people affected by the emergency who have been assigned an urgency level.

Note: the visual representations of the elements are schematic and may not reflect the exact scale. The technical dimensions indicated are the valid ones.

International Telecommunication Union · Place des Nations · CH-1211 Geneva 20 · Switzerland
Tel: +41 22730 5111 · Fax +41 22733 7256

3.1. Samples: pieces that represent samples collected in a risk zone.

- Number: 3
- Material: wood
- Dimensions: flat circular discs, 56 mm in diameter

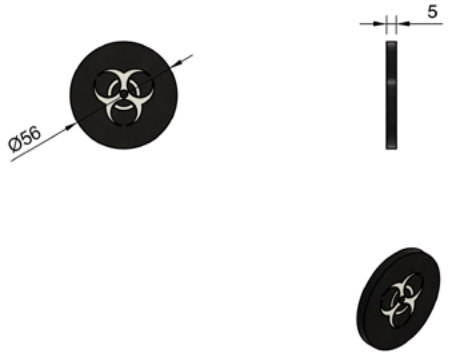

3.2. Laboratory: structure used to validate the delivery of the samples.

- Number: 1
- Material: wood
- Dimensions: laboratory structure with 3 marked slots of 60 mm

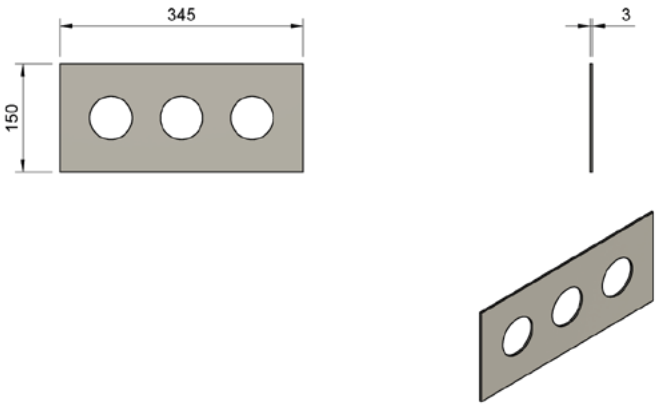

3.3. Short containment beam:

- Number: 1
- Material: wood
- Dimensions: 250 x 60 x 20 mm

International Telecommunication Union · Place des Nations · CH-1211 Geneva 20 · Switzerland
Tel: +41 22730 5111 · Fax +41 22733 7256

Big containment beam:

- Number: 1
- Material: wood
- Dimensions: 280 x 60 x 20 mm

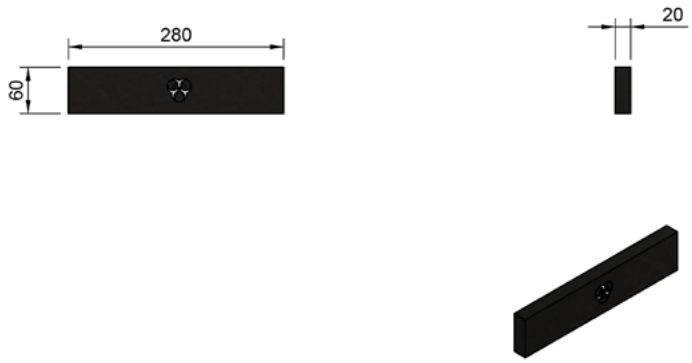

3.4. Medical kits: pieces that represent medical supplies intended for the healthcare zones of the field.

- Number: 10
- Material: wood
- Dimensions: cuboids, 25 × 25 × 20 mm

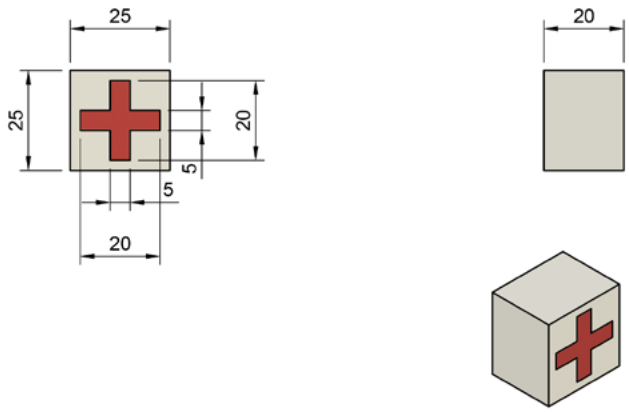

International Telecommunication Union · Place des Nations · CH-1211 Geneva 20 · Switzerland
Tel: +41 22730 5111 · Fax +41 22733 7256

3.5. Triaged patients: cylinders in three colours that represent patients with different urgency levels.

- **Critical case:**
  - Number: 4
  - Material: wood
  - Dimensions: Ø20 × 20 mm
  - Finish: red acrylic paint

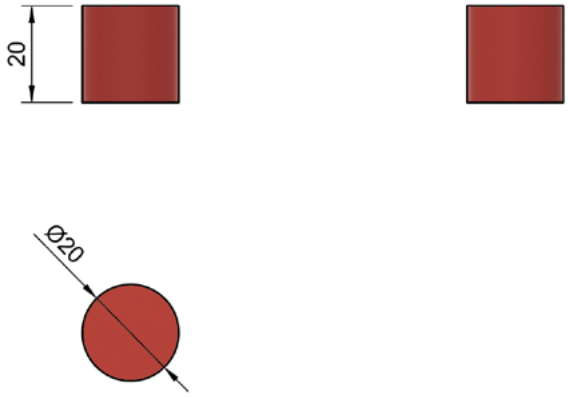

- **Observation case:**
  - Number: 4
  - Material: wood
  - Dimensions: Ø20 × 20 mm
  - Finish: yellow acrylic paint

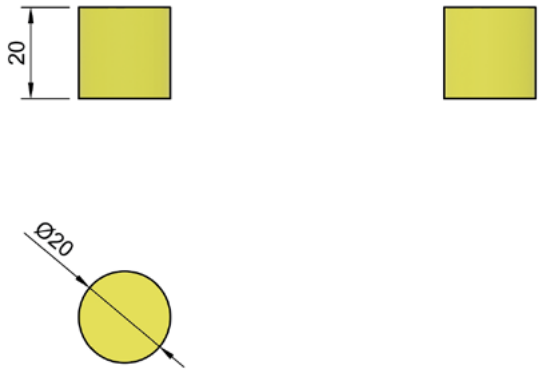

International Telecommunication Union · Place des Nations · CH-1211 Geneva 20 · Switzerland
Tel: +41 22730 5111 · Fax +41 22733 7256

- **Low-risk case:**
  - Number: 4
  - Material: wood
  - Dimensions: Ø20 × 20 mm
  - Finish: green acrylic paint

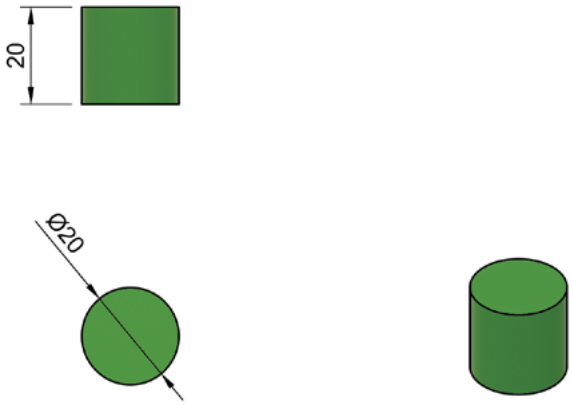

3.6. Circular starting-position stickers: circular marks that indicate the starting position of the triaged patients at the beginning of each match.

- Number: 12
- Dimensions: Ø20 mm

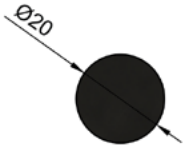

4. All materials must be placed according to the assembly instructions provided by the organisation.

5. The organisation reserves the right to introduce minor variations in the design of the materials, provided that they do not alter the balance of the challenge.

International Telecommunication Union · Place des Nations · CH-1211 Geneva 20 · Switzerland
Tel: +41 22730 5111 · Fax +41 22733 7256

Game rules

d. Game field

1. The game field simulates a response to a public health emergency, divided into different work areas.
2. General characteristics:
   - **2.1.** Total dimensions of the game board: 2,362 ± 5 mm x 1,143 ± 5 mm
   - **2.2.** Division into two equal halves for the simultaneous competition of two teams.

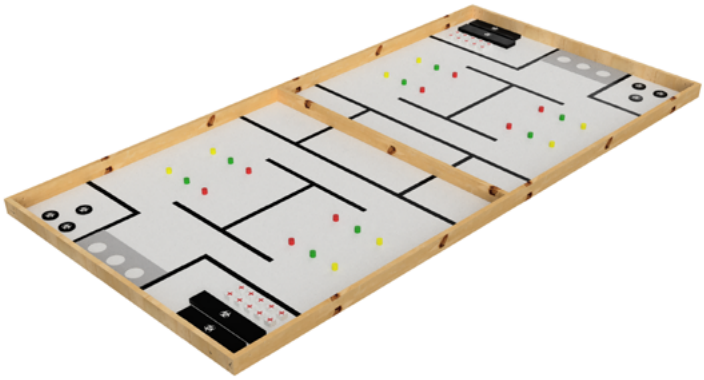

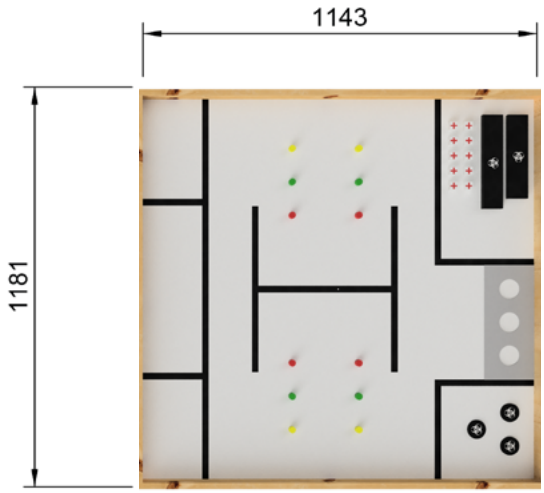

   - **2.3.** **Robot starting zone**, measuring 480 × 280 mm and marked out with 20 mm-wide black adhesive tape. This same type of tape may be used at other points on the playing field as a visual reference or to mark out other game areas.

International Telecommunication Union · Place des Nations · CH-1211 Geneva 20 · Switzerland
Tel: +41 22730 5111 · Fax +41 22733 7256

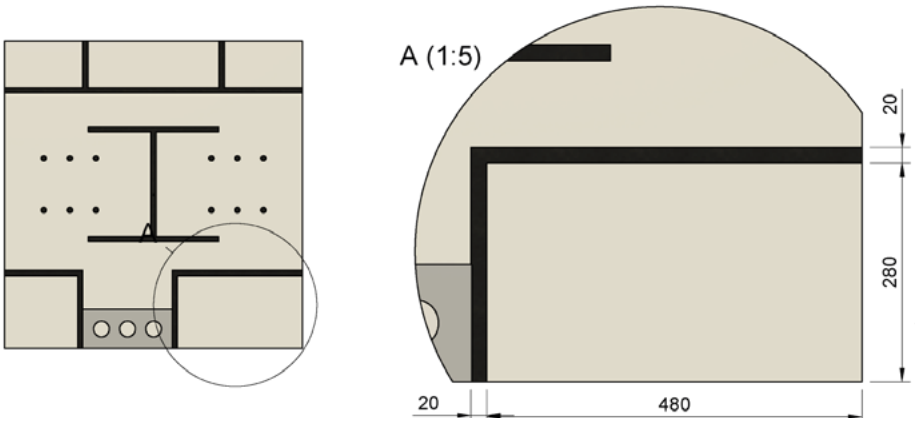

2.4. Healthcare zone, located at the top of the field. This zone brings together the main destination areas related to healthcare: the **hospital (H),** located in the centre, and the two **primary care centres (PCC),** located in each upper corner. These areas receive medical kits and medical cases according to the mission conditions.

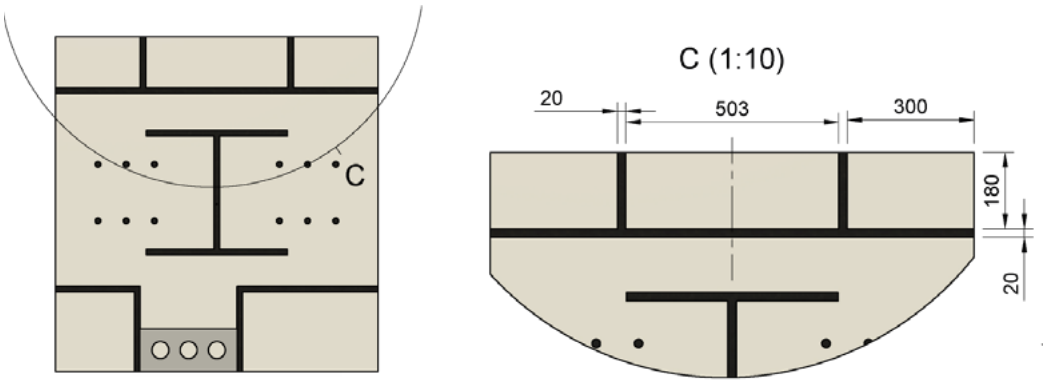

2.5. Recovery zone (RZ), located inside the starting zone. This zone represents the area intended for low-urgency cases or cases in recovery.

International Telecommunication Union · Place des Nations · CH-1211 Geneva 20 · Switzerland
Tel: +41 22730 5111 · Fax +41 22733 7256

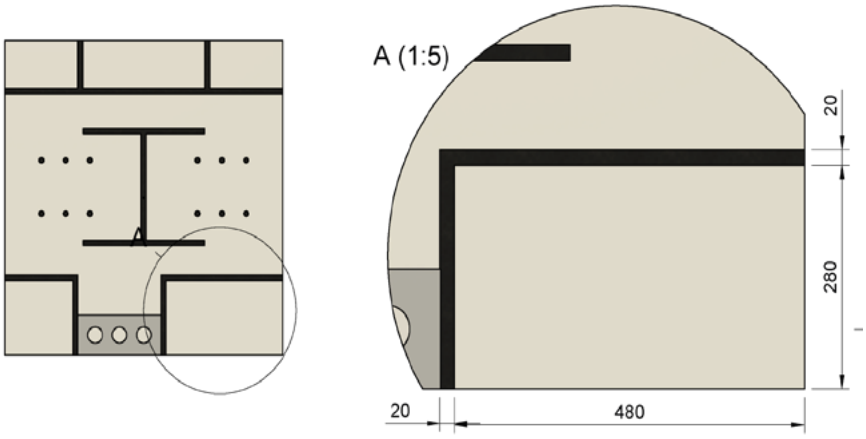

2.6. Quarantine zone, located in one corner of the field. This zone uses two walls of the board as part of its perimeter and is used to simulate the isolation of a risk area.

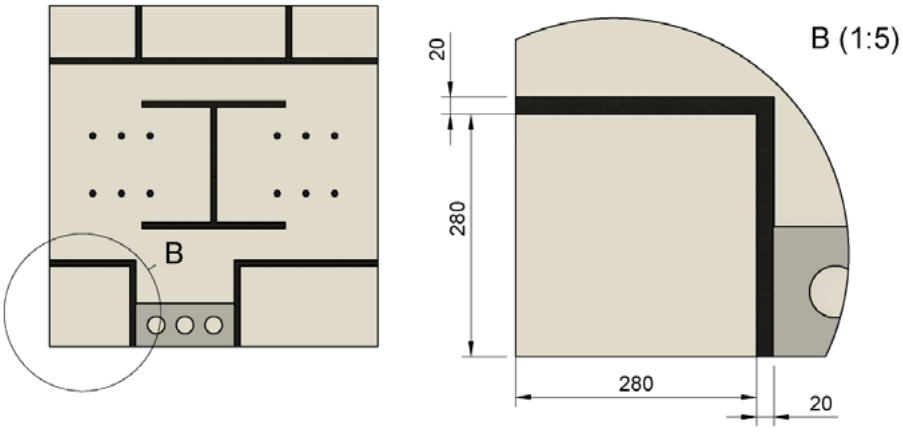

2.7. Laboratory zone, located near the quarantine zone. It contains a structure with three marked slots, one for each sample, which simulate laboratory analysis points.

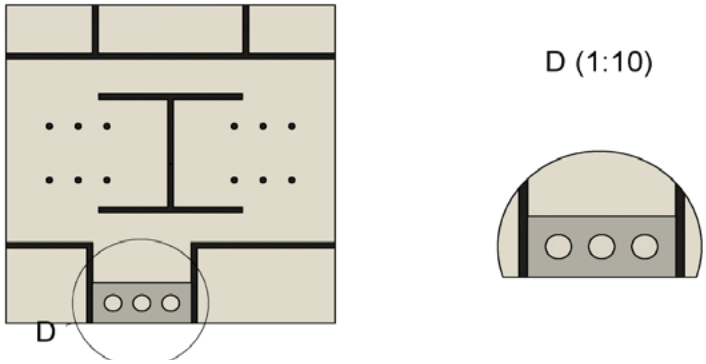

International Telecommunication Union · Place des Nations · CH-1211 Geneva 20 · Switzerland
Tel: +41 22730 5111 · Fax +41 22733 7256

2.8. Ground zone, located on the sides of the field. This zone contains twelve circular stickers, six on each side, which indicate the starting position of the triaged patients. In the Junior category, this arrangement is fixed. In the Senior category, the arrangement may vary in each match, but it must be mirrored on both fields, so that both teams compete with the same initial configuration.

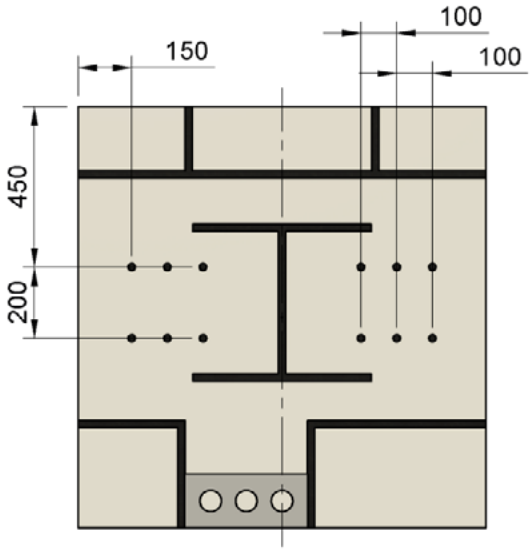

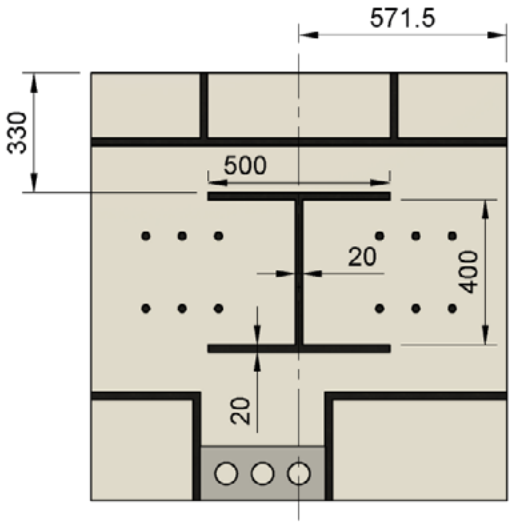

3. The field must be perfectly aligned and assembled to ensure equal conditions.

4. Teams may request a brief visual inspection before each match to detect possible irregularities.

International Telecommunication Union · Place des Nations · CH-1211 Geneva 20 · Switzerland
Tel: +41 22730 5111 · Fax +41 22733 7256

e. Robots

1. Each team must present at least one robot. There is no maximum limit on the number of robots, as long as all of them start completely inside the starting zone.
2. The robots must operate completely autonomously. They must be activated simultaneously at the start of the match and may only be stopped when the match ends or when instructed by the referee.
3. Each robot must have an easily accessible and clearly identifiable emergency stop mechanism, allowing it to be switched off quickly in the event of a safety risk or behaviour that breaches the rules.
4. Any type of materials and programming platforms may be used.
5. All robots must be decorated in relation to the theme of public health and well-being (SDG 3), within the health emergency scenario. This decoration will be checked through a prior visual inspection.
   - **5.1.** If a robot does not pass the visual inspection, or if it represents a risk to the field or to people, it will not be allowed to participate.
   - **5.2.** If several robots are presented, all of them must comply with the decoration requirement and pass the inspection.
6. A robot is considered active when it starts executing instructions without human intervention. It does not need to move immediately.
7. Each robot must be clearly and visibly identified with its own name or code. This identification must make it possible to easily recognise each robot during the inspection and throughout the competition.
8. All robots must meet minimum safety and integrity requirements. They must not have cutting or sharp elements, edges, loose parts, poorly secured cables or batteries that are not properly fixed. They must also not include any element that could damage the field, the game pieces, other robots or the participating people.

f. Team members

1. A maximum of three team members may enter the competition area. These individuals are responsible for positioning the robots, carrying out the necessary actions, and informing the referees.

International Telecommunication Union · Place des Nations · CH-1211 Geneva 20 · Switzerland
Tel: +41 22730 5111 · Fax +41 22733 7256

2. The remaining team members and mentors must remain outside the competition area.
3. Mentors and team members located outside the competition area may not communicate with the members inside or with the referees. Any questions or incidents must be reported to the designated volunteer staff outside the competition area, so as not to interfere with the scheduling and running of the rounds.

g. Round procedure

1. Each game round will have a maximum duration of **2 minutes**.
2. Preparation before the round:
   - **2.1.** Place the switched-off robots inside the starting zone, marked with black tape.
   - **2.2.** Check the field and report any issue to the referee before the round starts.
3. Start of the round:
   - **3.1.** The game starts when teams activate their robots after the timer begins.
   - **3.2.** Once the robots are running, teams may not intervene in their operation.
4. Human interaction:
   - **4.1.** The only permitted action is to hand the robot the initial base elements while it is completely inside the starting area.
   - **4.2.** Team members may pick up these elements and place them into the robot's receiving mechanism. However, they may not move, turn, reposition, push, or activate the robot during the handover.
   - **4.3.** Elements that have moved fully or partially outside the starting area may not be retrieved or handled.
   - **4.4.** No interaction with the robots is permitted.

International Telecommunication Union · Place des Nations · CH-1211 Geneva 20 · Switzerland
Tel: +41 22730 5111 · Fax +41 22733 7256

4.5. Any unauthorised interaction with the robot, the game elements, or the field during the round will be penalised in accordance with the penalties section.

4.6. During the round, the team may request a reset from the referees. The countdown will not restart, and any accumulated penalties will remain in place. The referees will reset the field to its initial configuration so that participants can reactivate all robots from the starting area.

5. End of the round:

5.1. The game ends when the 2 minutes run out or when the team decides to stop it earlier.

5.2. At the end of the round, the robots must remain stopped in their final position for the referee's assessment.

6. General conditions during the round:

6.1. All robots must remain within the limits of the field at all times.

6.2. If a robot leaves the field completely, it must be stopped immediately.

6.3. The field must be left ready for the next round. The team is responsible for removing its robots when instructed to do so.

h. Game procedure

1. The scoring system will be calculated differently for each category, adapting the missions to the corresponding age group.

2. Junior category (born between 2017 and 2013)

2.1. Mission 1. Containment and sample management

Before each match, the three samples are placed inside the quarantine area, located in the lower-left part of the field, in fixed positions. The two containment beams are placed inside the starting zone.

International Telecommunication Union · Place des Nations · CH-1211 Geneva 20 · Switzerland
Tel: +41 22730 5111 · Fax +41 22733 7256

Action	Points
Correctly placing one sample inside a laboratory slot	+15
Correctly placing all three samples inside the laboratory slots	+5
Each sample located outside the quarantine area and outside the laboratory zone at the end of the match	0
Each sample left inside the quarantine area at the end of the match	0
Correctly placing one containment beam in the indicated position, upright and stable by itself	+25
Completing the perimeter of the quarantine zone with the two beams and the two fixed walls of the field	+20

2.2. Mission 2. Healthcare management

Before each match, the ten medical kits are placed inside the starting zone. The twelve triaged patients are placed on circular stickers located in the side areas of the field, with six cylinders on each side. In the Junior category, the arrangement of the cylinders is fixed and remains the same in every match.

Action	Points
Correctly placing one medical kit inside a valid marked area	+3
Achieving the correct full distribution: six kits in the hospital, two kits in one primary care centre (PCC), and two kits in the other PCC	+20
Each destination zone left with no kits at the end of the match	0
Placing one triaged patient inside the correct destination zone	+5
Placing all red cylinders inside the hospital (H)	+6
Correctly distributing the yellow cylinders between the two primary care centres (PCC)	+8
Placing all green cylinders inside the recovery zone (RZ)	+6
Triaged patient outside their correct destination zone	0

3. Senior category (born between 2012 and 2009)

3.1. Mission 1. Containment and sample management

Before each match, the three samples are placed inside the quarantine area, located in the lower-left part of the field, in

International Telecommunication Union · Place des Nations · CH-1211 Geneva 20 · Switzerland
Tel: +41 22730 5111 · Fax +41 22733 7256

random positions that differ in each match. The two containment beams are placed inside the starting zone.

Action	Points
Correctly placing one sample inside a laboratory slot	+15
Correctly placing all three samples inside the laboratory slots	+5
Each sample located outside both the quarantine area and the laboratory zone at the end of the match	-3
Each sample left inside the quarantine area at the end of the match	-5
Correctly placing one containment beam in the indicated position, upright and stable by itself	+25
Bonus for completing the full perimeter of the quarantine zone with both containment beams and the two fixed walls of the field	+20

3.2. Mission 2. Healthcare management

Before each match, the ten medical kits are placed inside the starting zone. The twelve triaged patients are placed on circular stickers located in the side areas of the field, with six cylinders on each side. In the Senior category, the arrangement of the cylinders is randomised in each match, but it must be mirrored on both fields competing simultaneously.

Action	Points
Correctly placing one medical kit inside a valid marked area	+3
Achieving the correct full distribution: six kits in the hospital, two kits in one primary care centre (PCC), and two kits in the other primary care centre (PCC)	+20
Each destination zone left with no kits at the end of the match	-10
Placing one triaged patient inside the correct destination zone	+5
Placing all red cylinders inside the hospital (H)	+6
Correctly distributing the yellow cylinders between the two primary care centres (PCC)	+8
Placing all green cylinders inside the recovery zone (RZ)	+6
Red cylinder outside the hospital (H)	-3
Green cylinder outside the recovery zone (RZ)	-3
Yellow cylinder outside the two primary care centres (PCC)	-3

International Telecommunication Union · Place des Nations · CH-1211 Geneva 20 · Switzerland
Tel: +41 22730 5111 · Fax +41 22733 7256

i. Competition structure

1. The competition is divided into two phases: a qualifying phase and a knockout phase.

2. Organisation of the rounds:

2.1. Each team will play a minimum of two rounds in the qualifying phase.

2.2. Matches will be held between pairs of teams, competing simultaneously on the two halves of the same table. Each game field occupies half of the table.

2.3. The order of participation will be distributed in a balanced way to ensure the same opportunities for all teams.

3. Ranking:

3.1. Teams will be ranked according to their best score obtained in one of the rounds.

3.2. In the event of a tie, the following criteria will be applied, in order:

- First, teams will be ranked according to the highest score achieved in any of the qualifying rounds, from highest to lowest.
- In the event of a tie, the total number of points obtained across all qualifying rounds will be taken into account, from highest to lowest.
- If the tie persists, the number of absences will be considered, from lowest to highest.
- Next, priority will be given to the team that has received the fewest penalties.
- Finally, if the tie remains, the ranking will be decided by a draw among the tied teams.

4. Knockout phase:

4.1. The highest-ranked teams from the Qualifying Phase will advance to the Knockout Phase. A total of 4, 8 or 16 teams will advance, depending on the number of participating teams and the competition format. The organisation will determine this number and communicate it to all teams before the start of the competition.

International Telecommunication Union · Place des Nations · CH-1211 Geneva 20 · Switzerland
Tel: +41 22730 5111 · Fax +41 22733 7256

4.2. The initial pairings will follow a crossed model based on the qualifying rankings: the highest-ranked team will face the lowest-ranked team among those advancing to the Knockout Phase, the second-highest will face the second-lowest, and so on.

4.3. If a Knockout Phase match ends in a tie, the two teams will play another match against each other. If this second match also ends in a tie, the team ranked higher in the Qualifying Phase will be declared the winner. This rule will also apply to the final and the third-place play-off.

4.4. The winners of each match will advance to the next round until the final.

4.5. The two teams that lose their semi-finals will play a third-place play-off to determine third place.

5. Incidents:

5.1. Any serious incident during a match will be assessed by the refereeing committee.

5.2. If a team does not arrive on time for a round without a valid justification, the match will be considered lost.

j. Penalties during the game

1. Any action that breaks the operating rules or expected behaviour may result in a penalty.

2. Non-permitted interactions:

2.1. Touching the robot while the round is running: **-20 points**

2.2. Manipulating the field or the game pieces during the round: **-20 points**

2.3. Unauthorised restarting or modifying the robot program during the round: **-20 points**

3. Robot behaviour:

3.1. If a robot leaves the field completely: **-20 points**

3.2. If a robot damages structures or game pieces on the field: **penalty assessed by the refereeing team**.

International Telecommunication Union · Place des Nations · CH-1211 Geneva 20 · Switzerland
Tel: +41 22730 5111 · Fax +41 22733 7256

3.3. If a robot creates a risk for the public or other participants: **this may result in disqualification**.

4. Mission-specific penalties for the Senior category, already included in the "Game procedure" section:

4.1. Each sample located outside the quarantine area and outside the laboratory zone at the end of the match: **-3 points**.

4.2. Each sample left inside the quarantine area: **-5 points**.

4.3. Each destination zone left with no kits at the end of the match: **-10 points**.

4.4. Triaged patient outside their correct destination zone: **-3 points**.

Note: no penalty applies if the yellow cylinders are not split 2-2 between the two primary care centres, as long as all of them are placed inside a primary care centre (PCC).

5. Other situations:

5.1. If a team seriously breaks the rules, it may be disqualified.

5.2. The decisions of the refereeing team are final and must be respected at all times.

k. Sanctions during the competition day

1. Teams must be punctual and respect the assigned schedules. Any delay may result in sanctions.

2. If a team does not attend its round without a justified reason, the match will be considered lost and will not score.

3. Any form of interference with other teams, their materials or their robots is not allowed. This behaviour may be sanctioned with immediate disqualification.

4. Any act of disrespect towards other participants, the refereeing team or the public may result in penalties or, in serious cases, expulsion from the tournament.

5. The organisation reserves the right to stop a round or disqualify a team if it detects any behaviour that goes against the values of the competition or compromises safety.

International Telecommunication Union · Place des Nations · CH-1211 Geneva 20 · Switzerland
Tel: +41 22730 5111 · Fax +41 22733 7256